VU

VU CHECK VALVES

CHECK VALVES

ISO 9001

SPECIFICATIONS

• Type	Check Valve
• Body	block
• Material	AISI 12L14 / AISI 303
• Size	from DN6 up to DN50
• O-Rings	NBR, FPM, MQV, EPDM, FFKM
• Operating pressure	500 bar depending on valve size
	and seal materials selected
• Temp range	-10°C to +100°C for AISI 12L14
	-60°C to +230°C for AISI 303

MODEL CODE

VU G 1/2 **DN13** **PN500**

Pressure

from DN6 up to DN50

Type of valve		
	G	BSP
	N	NPT
	S	SAE
	SW	Socket welded
	BW	Butt welded

*For the complete list of plastic material compatibility see pp. 40.6

MATERIAL CLASSIFICATION

N.	DIN	W.Nr	AISI	ASTM
1	9 SMn Pb 36	1.0737	12L14	-
2	St 52-3	1.0570	-	A105
3	X12 CrNiS 18 8	1.4305	303	-
4	X2 CrNiMo 18 12	1.4435	316L	-
5	X20 Cr 13	1.4021	420	-
6	X5 CrNi 18 9	1.4301	304	-

SEAL CLASSIFICATION

A	POM	G	PA 612
B	NBR70 (BUNA)	K	GEMPTFE
C	RPTFE	H	PCTFE
D	PEEK	I	KARLEZ®
E	FKM	L	MVQ (silicon)
F	EPDM	M	Metal to Metal

VU CHECK VALVES

CHECK VALVES

TECHNICAL DRAWING

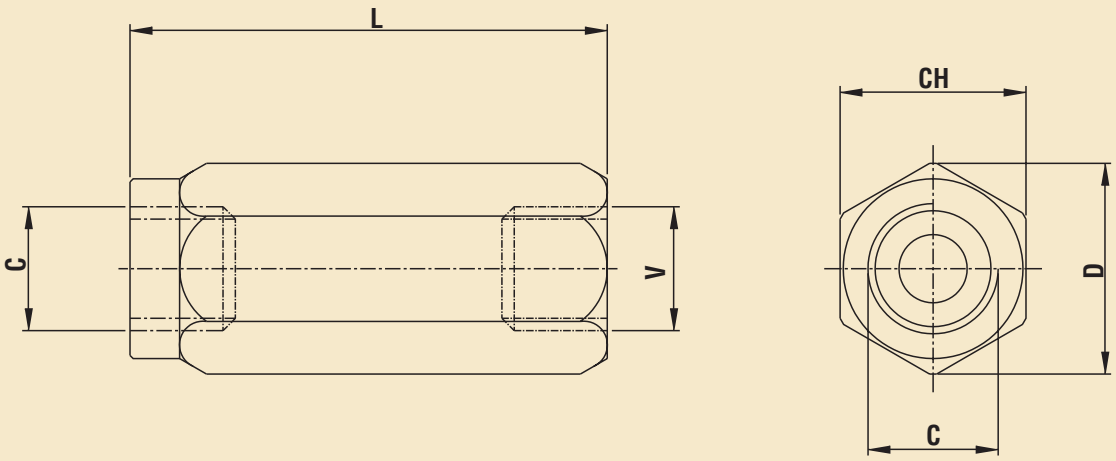

HYDRAULIC DIAGRAM

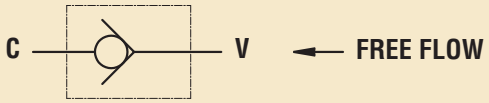

VU CARBON STEEL GAS DIN/ISO 228 BSP

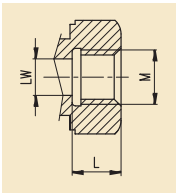

V.U. TYPE V-C	MAX FLOW Lt./min	C RACKING PRESSURE BAR	DN Ø	PN Kg/cm³	L	CH mm.	D	Kg	SW	Item Code
VU G 1/4	30	± 0.4/0.7	6	500	62	19	21	0.10	19	GC2GGT15011HOOO
VU G 3/8	45	± 0.4/0.7	10	500	68	24	26.5	0.20	24	GC2GGT25011HOOO
VU G 1/2	70	± 0.4/0.7	13	500	77	30	34	0.35	27	GC2GGT35011HOOO
VU G 3/4	110	± 0.4/0.7	20	400	88	36	40	0.50	34	GC2GGT44011HOOO
VU G 1"	160	± 0.4/0.7	25	350	105	41	46	0.70	41	GC2GGT53011HOOO
VU G 1" 1/4	210	1	32	350	135	55	63	1.65	50	GC2GGT63011HOOO
VU G 1" 1/2	320	1	40	350	145	65	72	4.20	55	GC2GGT73011HOOO
VU G 2"	460	1	50	250	160	80	88	7.50	80	GC2GGT83011HOOO

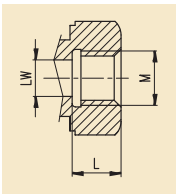

stainless steel

V.U. TYPE V-C	MAX FLOW Lt./min	C RACKING PRESSURE BAR	DN Ø	PN Kg/cm³	L	CH mm.	D	Kg	SW	Item Code
VU G 1/4	30	± 0.4/0.7	6	500	50	19	21	0.10	19	GC2GGT15044HOOO
VU G 3/8	45	± 0.4/0.7	10	500	60	24	26.5	0.20	24	GC2GGT25044HOOO
VU G 1/2	70	± 0.4/0.7	13	500	65	30	34	0.35	27	GC2GGT35044HOOO
VU G 3/4	110	± 0.4/0.7	20	400	75	36	40	0.50	34	GC2GGT44044HOOO
VU G 1"	160	± 0.4/0.7	25	350	98	41	46	0.70	41	GC2GGT53044HOOO
VU G 1" 1/4	210	1	32	350	110	55	63	1.65	50	GC2GGT63044HOOO
VU G 1" 1/2	320	1	40	350	112	65	72	4.20	55	GC2GGT73044HOOO
VU G 2"	460	1	50	250	125	80	88	7.50	80	GC2GGT83044HOOO

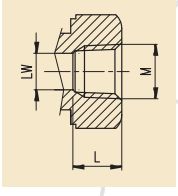

stainless steel

V.U. TYPE V-C	MAX FLOW Lt./min	C RACKING PRESSURE BAR	DN Ø	PN Kg/cm³	L	CH mm.	D	Kg	SW	Item Code
VU N 1/4	30	± 0.4/0.7	6	500	50	19	21	0.10	19	GC2NNT15044HOOO
VU N 3/8	45	± 0.4/0.7	10	500	60	24	26.5	0.20	24	GC2NNT25044HOOO
VU N 1/2	70	± 0.4/0.7	13	500	65	30	34	0.35	27	GC2NNT35044HOOO
VU N 3/4	110	± 0.4/0.7	20	400	75	36	40	0.50	34	GC2NNT44044HOOO
VU N 1"	160	± 0.4/0.7	25	350	98	41	46	0.70	41	GC2NNT53044HOOO
VU N 1" 1/4	210	1	32	350	110	55	63	1.65	50	GC2NNT63044HOOO
VU N 1" 1/2	320	1	40	350	112	65	72	4.20	55	GC2NNT73044HOOO
VU N 2"	460	1	50	250	125	80	88	7.50	80	GC2NNT83044HOOO

"The company reserves the right to operate dimensional changes without prior notice".

VU CHECK VALVES

CHECK VALVES

EXPLODED DRAWING

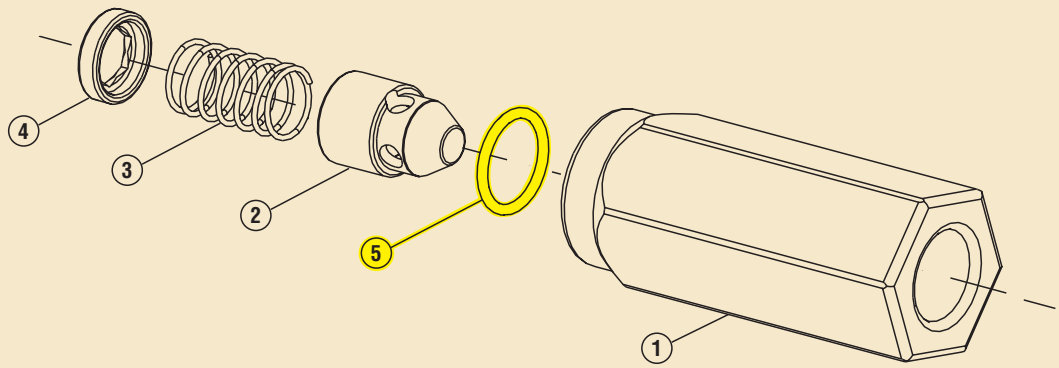

1	1	Body VU	1.0737/ AISI 316L
2	1	Poppet	18NICR / AISI 316L
3	1	Spring	UNI 3545
4	1	Metal ring	1.0737
5	1	O-ring viton	Only for AISI 316 Valve

MAXIMUM AND MINIMUM ADMISSIBLE WORKING TEMPERATURES FOR SEAL

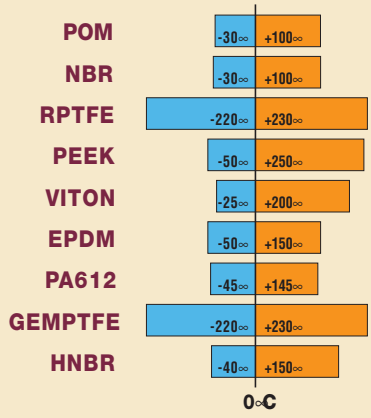

ON REQUEST

- Reduced bore
- O-Ring in EPDM, FFKM, MQV
- Seals in POM, PEEK, PA 612, RPTFE, GEMPTFE
- Body in AISI 316L
- Pressure Class PN 100 to PN 500
- For further special requests please consult our technical/commercial service